SEMARAK ILMU PUBLISHING

Semarak International Journal of Electronic System Engineering

Journal homepage:
https://semarakilmu.my/index.php/sijese/index
ISSN: 3030-5519




# Modelling A Finite Element Analysis for Pull-In Voltage of RF MEMS Switch using Comsol Multiphysics

Mohamad Zulkifly Ikmal Abdullah[1,2], Siti Nooraya Mohd Tawil[2,3], Burhanuddin Yeop Majlis[4], Jumril Yunas[4], Azrul Azlan Hamzah[4], Kamarul 'Asyikin Mustafa[2,*]

[1] 6 Skn Rejimen Askar Jurutera Diraja, Kem Bukit Cowder, 02500 Mata Ayer, Perlis, Malaysia
[2] Department of Electrical and Electronics Engineering, Faculty of Engineering, Universiti Pertahanan Nasional Malaysia, Sungai Besi, 57000 Kuala Lumpur, Malaysia
[3] Center for Tropicalisation, Defence Research Institute, Universiti Pertahanan Nasional Malaysia, Sungai Besi, 57000 Kuala Lumpur, Malaysia
[4] Institute of Microengineering and Nanoelectronics, Universiti Kebangsaan Malaysia, 43600 Bangi, Selangor, Malaysia

**ARTICLE INFO**

***Article history:***
Received 29 March 2026
Received in revised form 20 May 2026
Accepted 28 September 2026
Available online 1 October 2026

**ABSTRACT**

Microelectromechanical systems integrate electrical and mechanical components such as actuators, sensors, and electronic structures on silicon substrates and have feature sizes ranging from micrometres to millimetres. Fabrication of MEMS devices requires appropriate MEMS fabrication technologies to realize its small geometries with precise dimensional control. Strict fabrication process control is required to obtain repeatability of the manufactured product for the required design. Therefore, the development of standards for testing to minimize fabrication and testing failure, especially in obtaining the ideal standard switch, has always been of major concern for the design of RF MEMS switches. The conventional semiconductor switch, such as positive intrinsic negative diodes and field-effect transistors, has low efficiency due to low isolation, high insertion losses, and low linearity response. These are the push factor to research more in-depth on the capability of the new RF MEMS switch. This study focused on the modelling and finite element analysis of an RF MEMS switch using Comsol Multiphysics software. The simulation was conducted based on the range of pull-in voltage retrieved from the literature review which is from 4.5 V until 5.5 V. The actual result obtained from the conducted simulation shows that the pull-in voltage value for application usage is 5.0 V, while the value for tested pull-in voltage injected is 3.5 V. The value difference is due to the high vibration and pressure occurs in actual switch application. The study's objective is to determine the initial switch voltage required before switching to the ON state since it is a capacitive switch. The tested initial voltage is 0.7 mV, 1 mV, and 3 mV with pull-in voltage is set at 5.0 V. 1 mV is selected as the optimum initial voltage since it provides reliable value resulting from displacement while at the same time not exceeding the ON state rate. The polysilicon cantilever of the RF MEMS switch is designed and simulated to study the displacement and capacitance due to electrostatic force from the injected maximum voltages from applied 1 V to 9 V. At 3.5 V applied tested pull-in voltage, RF MEMS switch enters ON state

* *Corresponding author.*
*E-mail address: asyikin@upnm.edu.my*

***Keywords:***
Comsol multiphysics; finite element analysis; microelectromechanical system; polysilicon; pull-in voltage; RF MEMS switch; snaps-in

with the maximum displacement obtained is 0.9 µm at the rate of 39 µs, while the capacitance is 6.8 pF and contact force is 7.76 x 10-4 N/m2. When the maximum voltage is further increased to 7.5 V until 9 V, the displacement and capacitance are maintained at 0.9 µm and 6.8 pF, respectively but with the snaps-in issue. The highest contact force is shown by red colour based on the colour intensity scale observed in the simulation result regarding the snaps-in issue.

## 1. Introduction

Product reliability is the focus of engineering studies in today's world society. At the same time, electronic devices keep getting exponentially smaller in their sizes and are now being used in almost all necessary products around us in daily life, from the big devices such as refrigerators in the house to the very slim mobile phone in our pocket. To fulfil customer demand and remain strong in the market, the academic and industry's research and developments strive to produce a better slim product with better efficiency with microscale structure. The market tendency has opened a significant opportunity for the academicians and industry to align their focus on device fabrication using microelectromechanical systems, also known as MEMS.

Switching is a part of the electronics network used to complete the open or close loop in a network and circuits [1]. Currently, MEMS switches are actively explored by researchers. Researchers aim to fabricate an optimized switch with upgraded switching capability to increase its efficiency compared to its earlier counterparts. Earlier switches, such as the positive intrinsic negative (PIN) diode and field-effect transistors (FET) switches, are anticipated to be replaced soon due to the advantages of low power consumption, high reliability, and less manufacturing costs offered by MEMS switches [1-3].

Despite those advantages it offers, the RF MEMS still not competitive enough in terms of its actuation voltage and switching time compared to its earlier counterparts. The RF MEMS still facing several non-linearities and instabilities due to their inverse relationship with the square of the distance between two electrodes [3]. When the RF MEMS switch is actuated from the ON state to the OFF state at a certain distance known as critical distance, the moving electrode will touch the underlying fixed microcantilever [3]. The corresponding actuation voltage due to the two electrodes' contact is called pull-in voltage [3,4]. Hence, the pull-in voltage can be defined as a voltage applied due to the dielectric material contact, which occurs as a displacement between dielectric plates.

Therefore, the project will focus on obtaining an RF MEMS switch with high durability in preventing snaps-in damage [5]. A small value of pull-in voltage is aimed for the actuation of the MEMS switch [6]. It is anticipated that this study can give the exposure and overview of how an RF MEMS switch should be designed to obtain an excellent working switch with optimized parameters based on finite element analysis that will be conducted using Comsol Multiphysics software. By conducting finite element analysis before fabrication, it can significantly reduce production costs such as material and fabrication processes costs as the final design and parameters are already decided based on the final product requirement [7]. Figure 1 shows the 2D structure of the RF MEMS switch with its label and components.

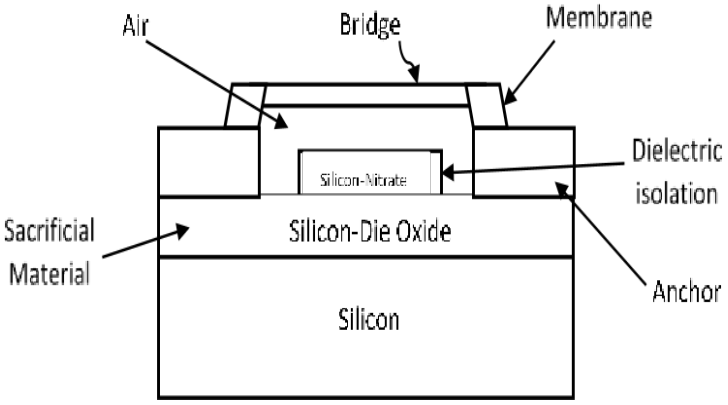


**Fig. 1.** 2D structure of RF MEMS switch with label and components

### *1.1 Problem Statement*

MEMS switches have been in extensive study for over 20 years by researchers in numerous industrial, academic, and government research laboratories [1]. The demand for small packaging to free up space for usage as one of the essential components in small or slim electronic devices such as mobile phones is why there is a significant increase in MEMS device fabrication [8]. However, this simple device has been troubled with its reliability and packaging issues that have prevented commercial success until now [7,9]. Despite the advantages of low power consumption, high reliability, and less manufacturing costs it offers, the RF MEMS switch still facing a snaps-in issue when the moving electrode is snapped down to the fixed microcantilever to generate pull-in voltage [3,10].

The RF MEMS can also be explained using an interaction between the upper membrane and its underlying dielectric membrane. The RF MEMS switch operates with the electrostatic force membrane's application with the interaction of a dielectric membrane [11]. The interaction between the pull-in force occurs at a gap that creates contact forces acting on a square membrane made of polysilicon plate suspended above the silicon nitride fixed microcantilever [7,12]. Displacement from the membrane to fixed microcantilever still needs to be studied to prevent excessive pull-in force, which causes a snap-in condition that will damage the switch function.

Therefore, there is still a gap to study how to prevent the snap-in of the moving electrode and fixed electrode to improve the effectiveness of the RF MEMS switch while also able to reduce further cost as modelling and finite element analysis is conducted before proceeding to the fabrication process of the designed RF MEMS switch [13,14]. This RF MEMS switch is studied in this project, and the required parameters and characteristics are considered during the modelling and finite element analysis before proceeding to the fabrication process. During the switch's operation simulation, the capacitance values is also determined to ensure the pull-in force's correct interaction when this switch operates in conducting mode [15].

In this project, an extensive literature review on the RF MEMS switch is conducted. An RF MEMS switch may be fabricated using the MEMS fabrication process following a strict procedure [10,16]. Before the fabrication process, it is highly recommended that the RF MEMS modelling and simulation be conducted using Computer Aid Design (CAD) to obtain the optimum fabrication parameters to reduce the fabrication failure rate [4]. By doing so, fabrication costs due to fabrication failure may be reduced. After an extensive literature review, the finite element analysis on the RF MEMS switch will be modelled using Comsol Multiphysics software. The electromechanics module is selected to study both conducting and optimum parameters for the dielectric materials control. This project aims to

design the RF MEMS switch in Comsol Multiphysics software using the MEMS module. The RF MEMS switch will consist of a thin micromechanical bridge structure suspended over a dielectric layer.

### *1.2 Objectives*

The main objective of this study as outlined below:

i. To investigate the behaviour of the RF MEMS switch with the voltage application.
ii. To design and conduct finite element analysis of RF MEMS switch in the Comsol Multiphysics software using the electromechanics multiphysics interface to handle both conducting and dielectric materials.
iii. To determine the optimum pull-in voltage and the capacitance values in conducting mode in preventing snap-in.

## 2. Methodology

The study starts with identifying the current RF MEMS switch design issues to develop the problem statement for the project. Then, the study's objectives are decided, and the study will be limited to a simulation work using Comsol Multiphysics software. The literature review has been conducted to understand the characteristics and working principles and identify the RF MEMS switch issues. The literature review is continuously updated in parallel with the simulation work.

As discussed in the Shape Metal Alloy (SMA), Si-Polycrystalline silicon has been selected as the study material for this project to produce the microcantilever membrane. At the initial stage of the simulation work, the values of variables are being set and declared to the model builder. The model builder shows the sub-parameter that needs to be considered to ensure the structure design is built error-free. Fig. 2 shows the overall project flowchart.

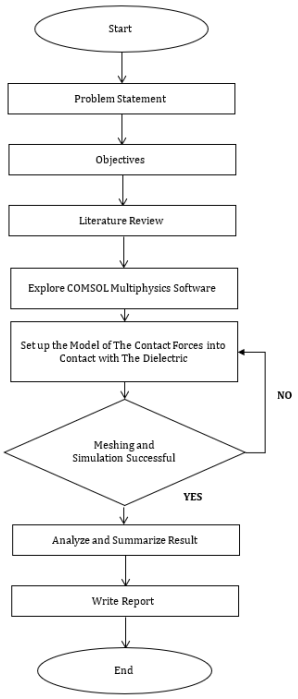


**Fig. 2.** Project development

Model Wizard is chosen to guide in physics, space dimension, and study step for the design. The space dimension can be selected at the edit view page to determine the project design, whether in 2D, 3D, Axisymmetric 2D, or Axisymmetric 3D. The view unit can be as small as nm, mm, cm, and many more. However, this microcantilever switch design will be set up in the space dimension of 3D for the size unit of µm. The selected 3D dimension is saved as the new project on the computer is shown in Fig. 3.

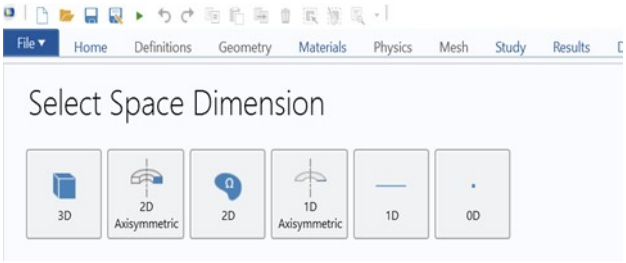


**Fig. 3.** Space dimension project selection

The physics database stores all the physical and geometrical domains where the properties specified are summarised in Figure 4. The electromechanics module is selected for this project as the design is based on the combination of electrical and mechanical properties. The two properties are required to determine occurrence capacitance, where it creates movement as a displacement of the model. Variation in boundary, domain, and edge structures are specified from the Select Physics toolbar to define the specific phenomena to handle and post-build the cantilever design to evaluate the relevant reliable result.

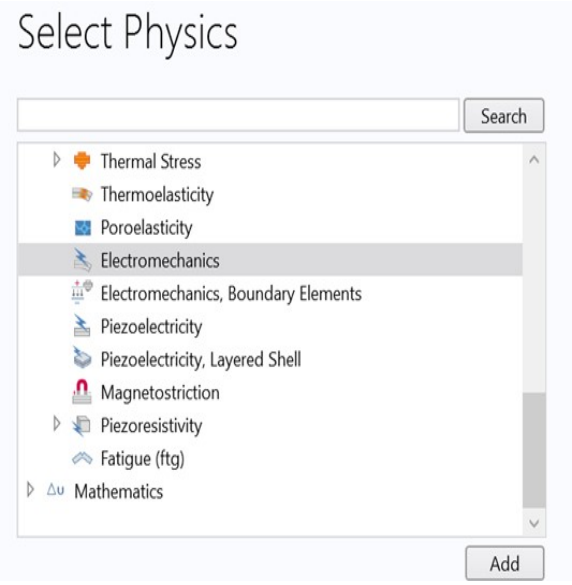


**Fig. 4.** Physics database selection

Geometry setup is the first step to build the model. The cantilever's design is measured using the finite elements, and therefore the geometry GUI is set. The length unit is set to micro-scale. For the Global Definitions, parameter 1 is selected. The setting is inserted based on the set values that has been declared as unknown, as shown in Table 1 that is suitable values for this designed switch simulation.

**Table 1**
Designed switch model

| Description | Value | Name |
|---|---|---|
| Initial voltage | 1 mV | V0 |
| Voltage step | 5 V | Vstep |
| Insulator height | 100 nm | insheight |
| Air height | 900 nm | airheight |
| Spring stiffness | $1e^{15}$ N/m³ | en |
| Contact force | 5 $e^{5}$m Pa | tn |

In the definition tree bar, the variable is selected, and the local variable is located in setting the boundaries involved in each layer. The setting window variables' value set up is as shown in Table 2. The gap, contact pressure, and Va are built to illustrate the boundaries that are separately build and achieve the maximum appropriate values.

**Table 2**
Declared function

| Name | Expression | Unit |
|---|---|---|
| gap | airheight+w | m |
| contact pressure | (gap<=0)*(tn-en*gap)+(gap> 0)*tn*exp(-gap*en/tn) | N/m³ |
| Va | Va V0+Vstep*step2(t/1[s]) V | v |

The expression is selected based on the model in 3D. The contact pressure is based on the equation of the barrier method. The voltage armature is the sum of step initial dependent on every ten μs of step rise. Back to geometry 1, the work plane is chosen to show of rectangle structure. The rectangle structure is built up from four different parts, as shown in Table 3. The thickness and height values will be inserted in the work plane toolbar for each rectangle, respectively. The text field is the field that consists of x, y, and z-axis that support the drawing axis. The parameters shown in Table 3 are set in the size and shape section located in the setting window.

**Table 3**
Switch skeleton

| Structure | Width | Height | Text Field |
|---|---|---|---|
| Rectangle 1 (r1) wp1 | 100 | 5 | xw = -60 |
| Rectangle 2 (r2) wp2 | 50 | 60 | yw = -10 |
| Rectangle 3 (r3) wp3 | 110 | 60 | xw = -60 ; yw = -2.5 |
| Rectangle 4 (r4) wp4 | 110 | 60 | xw = -60 ; yw = -2.5 |

The geometry is extruded to create the 3D busbar geometry. This busbar makes the design pop up from the axis, and the compilation can be done when building all by the union node button. The RF switch model is designed by three layers of the membrane where each distance is set to be one μm, two μm, and four μm, respectively. For a detailed definition, the global step's function is located, and the parameter of 1.05 x insheight is inserted, as shown in Figure 5 for step 1. The smoothing for text zone size is set to 0.05 x insheight. The smoothing of structure selection is set to 1e-5.

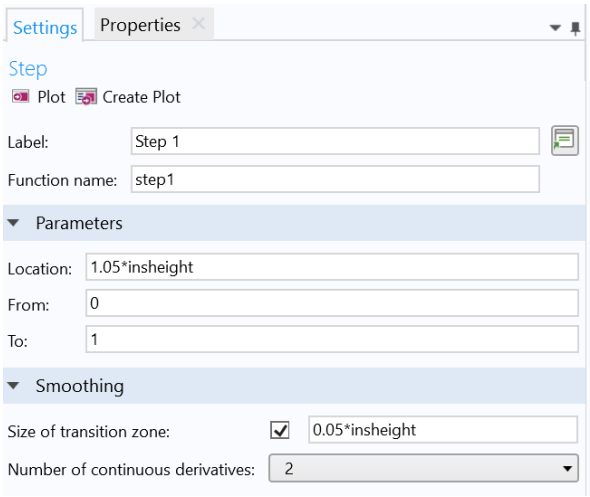


**Fig. 5.** Height distance cantilever GUI

After that, the cantilever design is set to have four duplicate layers, cascading of each other. The explicit function is used here to create the selection of individual geometric identities and simplify it. Each of the boundaries carries out different properties of the layer. The Comsol Multiphysics is set to decide on which layer can experience electromechanics. The domain boundary of 8, 12, 26, and 29 is then selected and named Bridge, as shown in Fig. 6. The boundary is chosen manually in the graphic viewer.

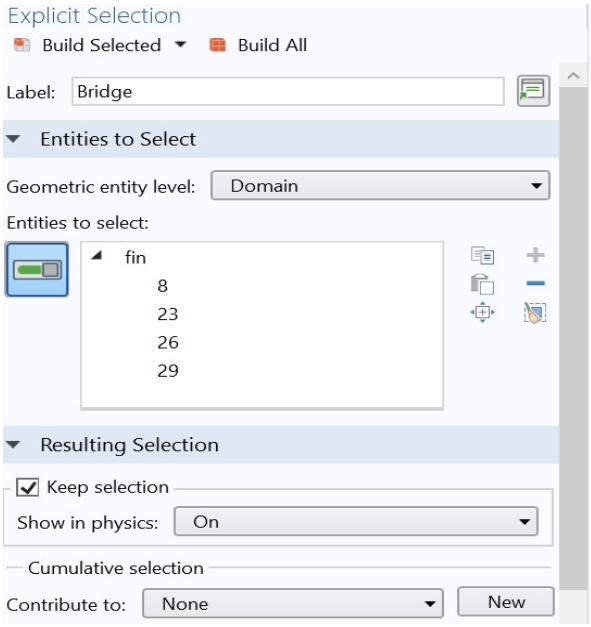


**Fig. 6.** Domain selection boundary GUI

Then, the entity inside the box is created. Five boxes are being created to the made identity each layer of cantilever. Box 1, box 2, box 3, box 4, and box 5 are identical for Gap, Base, Bridge lower side, symmetry-x, and symmetry-y, respectively. Table 4 shows the description and values of each of the boxes inserted. The axis of the box is determined based on the position of the identical structure. The values shown in Table 4 are then used to set up for each structure, as explained earlier.

**Table 4**
Layer axis measurement

| Structure | Axis | Value (µm) |
|---|---|---|
| Box 1 | z | 1.1 |
| Box 2 | z | 0.1 |
| Box 3 | z | 1.1 |
| Box 4 | x | 45 |
| Box 5 | y | 45 |

The compilation is complete when the boundaries come to the union step. Setting of selected dialogue box where symmetry-x and symmetry-y are chosen. Union labelling is defined as the Symmetry text field.

This simulation study is labelled as Non-solid. The three terminals are used to insert the voltage applied to the Boundary involved, as shown in Table 5. Terminal 3 is applied to the Bridge. Then, Terminal 1 is added to the Bridge. Domain used as the first stationary study in step time of 25 µs. This domain will disable the transient steps and make terminal 1 active. Those terminal structures are more defined as deforming and symmetrical in the domain. For the selection, non-solid and symmetry are chosen from this terminal structure to ensure the experience is more in this electrostatic study.

**Table 5**
Terminal boundary representing

| Terminal | Boundary involved | Representing |
|---|---|---|
| terminal 1 | Bridge | Va |
| terminal 2 | Base | 0 |
| terminal 3 | Bridge | 0 |

The material of the cantilever is then added by locating the add material window, and the built-in Air is selected for the options tree. The component selected in this project is MEMS, semiconductor case as shown in Figure 7. This is where Silicon-Polycrystalline is selected. In the selection of geometric entity selection, this material will be used to choose Bridge its domain.

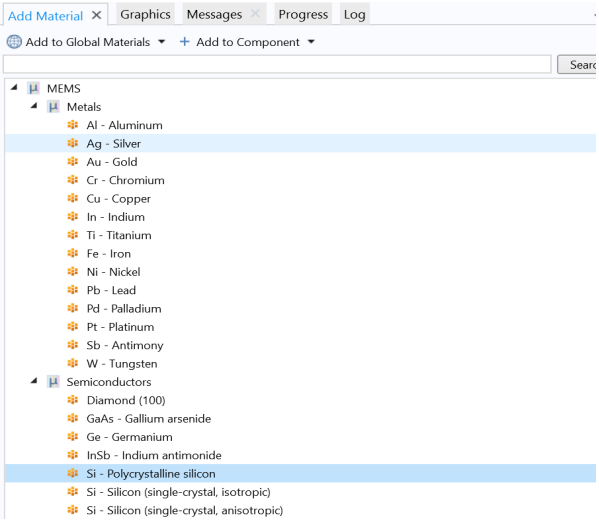


**Fig. 7.** Material selection GUI

The gap of the boundary is chosen in the next geometric entity section. The gap is considered to contain air inside of it. The material content tree is expanded, and the value of permittivity is inserted. The material properties are then extended, and the gap is chosen to be non-solid. The variable is based on the function in Table 6 as declared, representing the symmetrical of the Gap i and j position in project viewer is set in material builder.

**Table 6**
Relative permittivity database value

| Property | Variable | Value |
|---|---|---|
| Relative Permittivity | epsilonr_iso ; epsilonrii = epsilonr_iso,epsilonrij = 0 | 1+6.5*(1step1(z/1[m])) |

In Comsol Multiphysics, meshing is a physics control where the structure's detail is generally torn apart for different elements. These elements are pyramids, hexahedra (bricks), triangular prisms (prisms), and tetrahedra (tets) shapes. The meshing procedure is conducted only when the geometry and studies can be defined. The finer meshing elements produced more accurate analysis than elements with coarser meshing but consumed more time to complete the simulation.

This model is operated in a time dependent setting. Since the model simulation completes very quickly, the setting time is ranged between $0.5x10^{-7}$ s and 5 $x10^{-5}$ s. The value is inserted into the study toolbar, and the result is plotted based on the time dependent. The electric potential study is computed with this time selection. The initial voltage and maximum voltage applied with the selected value are selected by varying the input study parameters. The varied input study makes the result varied and reliable to study based on the displacement, capacitance, switching response time, and contact force plots. As shown in Figure 8 and Figure 9, the parameter sweep is selected to compute the study.

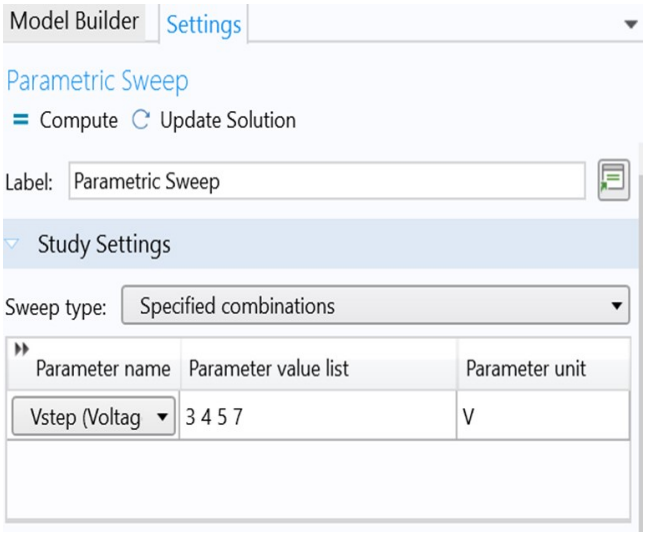


**Fig. 8.** Parameter maximum voltage tested swept GUI

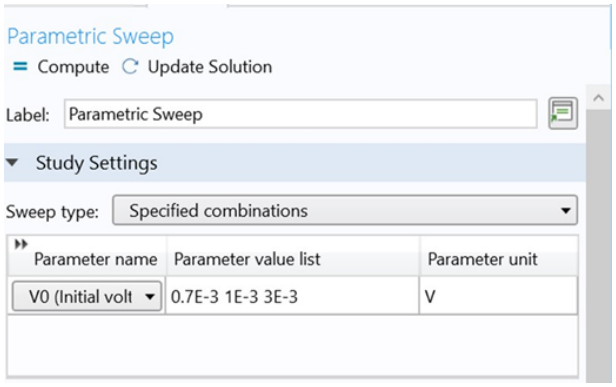


**Fig. 9.** Parameter initial voltage swept GUI

The Comsol Multiphysics has computed the default solver. The time step for this solution has also been selected and fully coupled is chosen, which means the model is ready to compute shown in Figure 10.

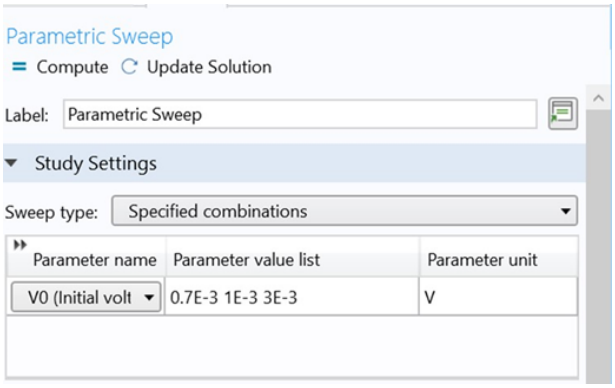


**Fig. 10.** Compute design GUI

The dataset is chosen to load the result, and material form (X,Y,Z) is loaded to display the whole structure to the graphic view. The 3D plot group is selected with the dataset to show displacement. Mirror 3D is chosen, and the model is shown in Figure 11 with the graphic view toolbar. The displacement can be renamed and displayed in the graph as contact force by the 3D Plot Group. For the electric potential (es), the method to show the result is the same as where Mirror 3D is chosen to give out the ON state of the switch once it is operated. The capacitance of the contact generated when the 1D Plot Group is selected shown in Figure 11. The result is in a renamed Capacitance graph and is situated as a pop-up title on the generated graph. This reliable result is based on the analysis that has been made in Comsol Multiphysics. The best output of the model is considered in the software with a reliable value.

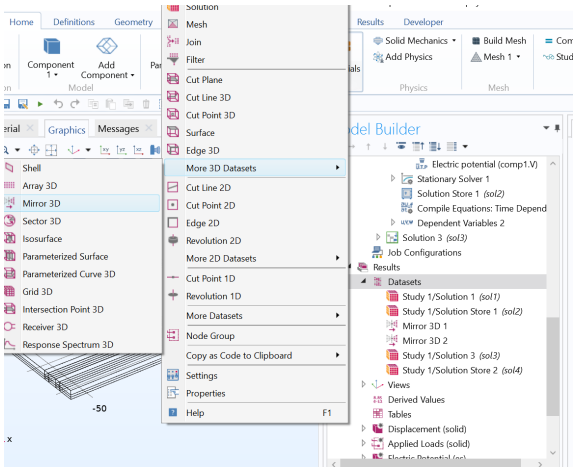


**Fig. 11.** Setting for load data result

The model is validated by using the successful meshing compilation and computation of the study. The testing of the framework is based on the study parameter to be evaluated. The model is compared with the one stated in a related research paper that designed this model. The Comsol Multiphysics compiles the parameter values, and the study is defined as what studies to be made. The reliability of the model is determined by optimum simulation by the software.

## 3. Results and Discussion

The results that have been obtained based on the conducted simulation are summarised as follows.

### *3.1 Meshing Results*

Meshing is a physics control that controls the mesh and results of a significant object in COMSOL. The mesh setting can be selected to be normal, fine, finer, extremely finer, coarse, coarser, or extremely coarser. The simulation work requires large computer memory to run. The meshing can be converted to several types of shapes such as free quad, mapped, and free triangular. The shapes determine the quality of a product study that provides the shape net influenced by selected physical control [12]. The finer meshing is, the more accurate the analysis is compared to coarser meshing. The 2D and 3D object is shown in Figure 12, while Figure 13 shows a one-quarter simulation of the switch.

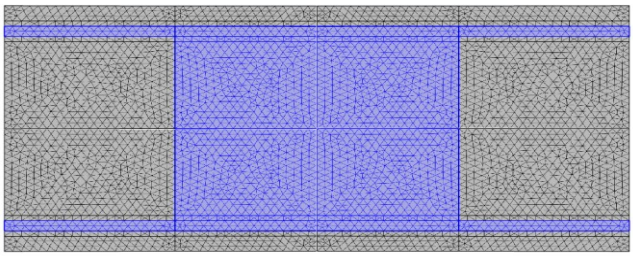

**Fig. 12.** 2D simulation using normal meshing

One-quarter simulation is used instead of using the whole design as the design has a symmetry design that can be divided into four symmetry designs. Therefore, one-quarter simulation can be used to represent the result for the whole design of the switch cantilever while reducing the

simulation duration. The computation for the simulation to complete is 11 hour 31 minutes 1 second, as shown in Figure 10. The finer the meshing setup is, the longer the duration for the simulation to be completed. Table 7 shows the result of the successful 2D design for all the meshing type.

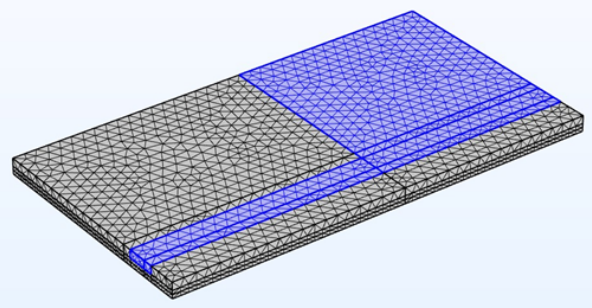

**Fig. 13.** One-quarter simulation for successful 3D design

**Table 7**
2D meshing result

| Type of Meshing | 2D Meshing Result |
|---|---|
| Extremely y fine | 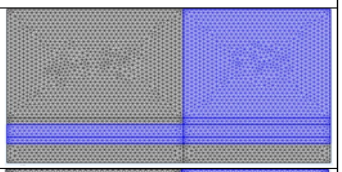 |
| Extra fine | 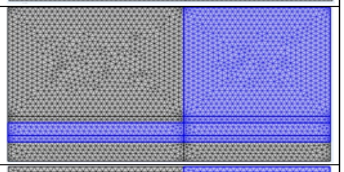 |
| Finer | 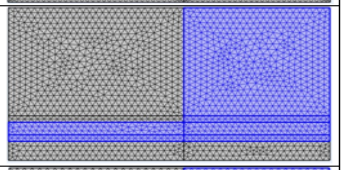 |
| Fine | 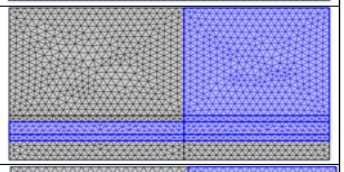 |
| Normal | 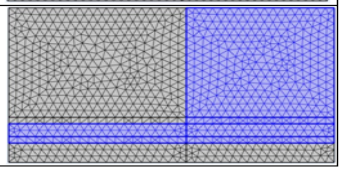 |
| Coarser | 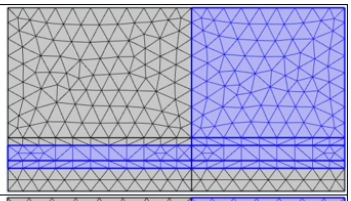 |
| Extra Coarser | 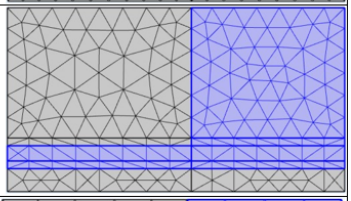 |
| Extremely y Coarser | 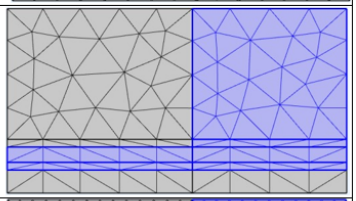 |
| Coarse | 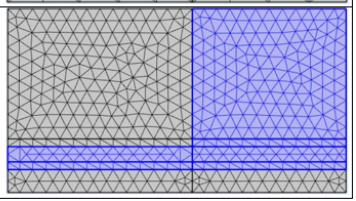 |

Only normal meshing setting is selected for the simulation due to the limitation of computer RAM that is used. The time taken for the simulation can be longer if set to finer and shorter if set to extremely coarser. Due to the limitation of the computer RAM used, only normal and coarser meshing are successful in building this cantilever design.

### *3.2 Pull-in Voltage*

To determine the value for the pull-in voltage, a simulation is conducted to find the best pull in voltage value by using this model design. The electrostatic force's effect of the polysilicon and the fixed nitrates will push the cantilever downward and nearly touched the nitrates into 0.9 nm. Maximum voltage will be injected into the end of the switch's legs during the simulation. Comsol Multiphysics simulation tool is used to calculate the best optimum pull in voltage in RF MEMS switch application for this polysilicon cantilever. The successful pull-in voltage of the application switch obtained is 5 V. Fig. 14 shows the maximum pull-in voltage for the polysilicon obtained. The colour region shows the simulation result concentration for the pull-in voltage. The result of the pull-in voltage of the RF MEMS switch's application is shown in Fig. 14.

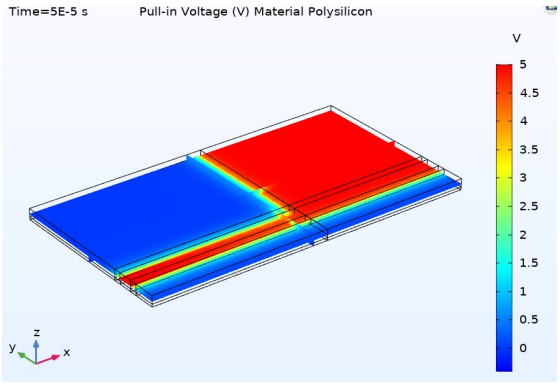


**Fig. 14.** Optimum pull-in voltage in RF MEMS switch application

To test the pull-in voltage without application, the variation of voltages is set to 1.0 V, 1.5 V, 2.0 V, 2.5 V, 3.0 V, 3.5 V, 4.5 V, 5.0 V, 5.5 V, 6.0 V 7.5 V, 8.5 V, and 9.0 V. The displacement that turns the switch to ON state for the associated applied pull-in voltage is observed. All data for the obtained result in Comsol Multiphysics is then extracted and plotted into Origin Pro software for a better graphic representation. Fig. 15 shows that the pull-in voltage that happens without the aid of Comsol Multiphysics calculation started at 3.5 V. From both simulations, it is understood that there are different values between pull-in voltage when the software calculation of RF MEMS switch's application and when the switch is injected pull-in voltage tested. The obtained result explains the factor of the pressure of the design in the only simulation and the RF MEMS switch's application. When the design is in a ready state, the switch in the application has its pressure inside the switch body where more pull-in voltage to make the cantilever be ON state [17]. Simulation with computer without application shows less pull-in voltage value than the application switch as it neglects the pressure factor [18]. Technically, an actual application considered pressure where the switch design must against the air molecules and the body from inertia. More force is needed to make it pull downwards [18].

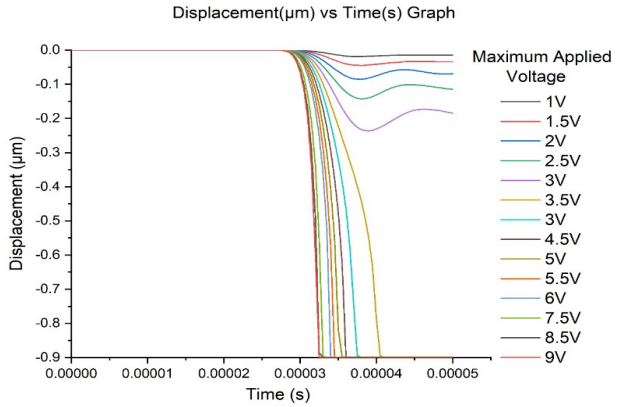


**Fig. 15.** Displacement versus time of the tested maximum voltage

The second factor is the vibration when the switch is running with a particular device. A microscale switch is run with the device and carry out vibration such as shock and drop. The shock vibrates the switch and makes more electrostatic force to make the switch in the ON state [15]. Thus, more pull-in voltage is required to make the switch ON. Based on the literature review [19], the pull-in voltage range for this model in RF MEMS switch application is 4.5 V to 5.5 V. The value of the 5.0 V results from this cantilever design is therefore acceptable.

### *3.3 Initial voltage*

The initial voltage from this simulation illustrates the cantilever that operates in ready states. The RF MEMS switch cantilever will gain a minimum initial voltage before it goes to the ON state. This model is categorized as a capacitive switch, so to react before the polysilicon cantilever going downward, it must be energized by initial voltage [18]. In this simulation, the focus is to determine an optimum initial voltage for the cantilever to be standby for ready state conditions and illustrate the intensity colour of displacement by injecting the initial voltage into the polysilicon cantilever. The tested initial voltages are 0.7 mV, 1 mV, and 3 mV. Table 8 shows the displacement result of the cantilever by the initial voltage to be in the ready state.

**Table 8**
Displacement result simulation

| Tested Initial Voltages | Result |
|---|---|
| 0.7 mV | 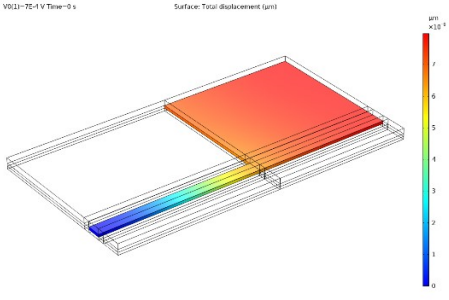 |

| | |
|---|---|
| 1.0 mV | 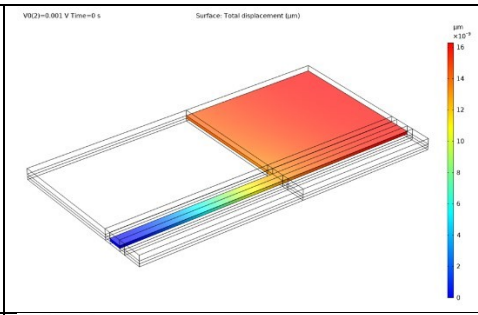 |
| 3.0 mV | 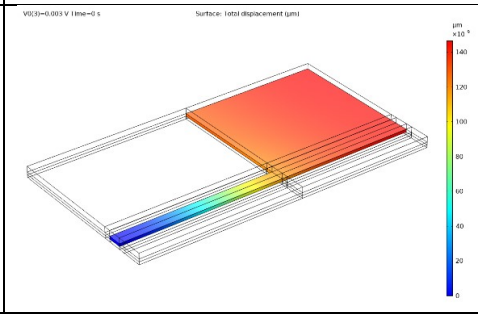 |

The initial voltage result shows the changes of the cantilever distance between the polysilicon cantilever and fixed nitrates in terms of the distance between those both. Comsol Multiphysics simulation tool is used to handle this finite element analysis for the study including the displacement. The region simulated on the design is arranged to increase with the distance increase. The following colour intensity and scale increase; dark blue, light blue, green, yellow, orange, and red. These colour regions are shown in the simulation design.

The flow of current through the design is from the legs towards the centre of the cantilever. The cantilever colour scale region increases from its legs. The least displacement is the hardest region in which mechanical force is more focused on that point [18]. The increase in initial voltage also increases the displacement contact between the polysilicon cantilever and fixed nitrate. Based on the literature review conducted before the simulation work, the initial voltage is optimum at the value of 1 mV. The simulation shows optimum on 1 mV as a more reliable voltage to this capacitive switch that shown optimum contact force in colour scale intensity.

### *3.4 Polysilicon Cantilever Capacitance*

The simulation is carried out to find the capacitance value for the RF MEMS switch polysilicon cantilever. In Comsol Multiphysics software, the simulation is conducted based on the time rise in a graph after the maximum voltage value flows across the switch. Comsol Multiphysics simulation tool is used to calculate an optimum capacitance of RF MEMS switch application. All the obtained capacitance result in the Comsol Multiphysics software is extracted and then re-plotted using Origin Pro software. Based on the simulation, the maximum capacitance for polysilicon cantilever to switch to ON state is 6.8 pF. The tested maximum voltage from 1 V to 9 V shows that the capacitance is constant at this value. Theoretically, the maximum capacitance value has been achieved at the tested value maximum voltage from 7.5 V to 9 V. The tested maximum voltage simulation result is shown in Fig. 16.

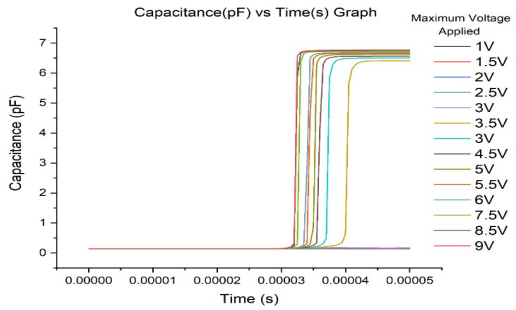


**Fig. 16.** Capacitance versus time graph from the tested maximum voltage

### *3.5 Cantilever Contact Force*

The force contact is studied to simulate force from the cantilever's downward pull to find an optimum maximum voltage with the time response to prevent failure by maximum cantilever displacement. The electrostatic force made up by the polysilicon cantilever will attract and pulled downward to the fixed nitrates. The Comsol study database calculates the downward pull force. This simulation shows the maximum contact force ($N/m^2$) and the design colour intensity due to the contact force. Using the tested maximum voltage of 3.0V, 3.5 V, 4.5 V, 5.0 V, 5.5 V, 7.5 V, 8.5 V, and 9.0 V, the contact force polysilicon cantilever is simulated, and the obtained result is shown in Table 9.

**Table 9**
Polysilicon contact force simulation

| **Applied Maximum Voltage Value** | **Simulation Result** |
|---|---|
| 3 V | 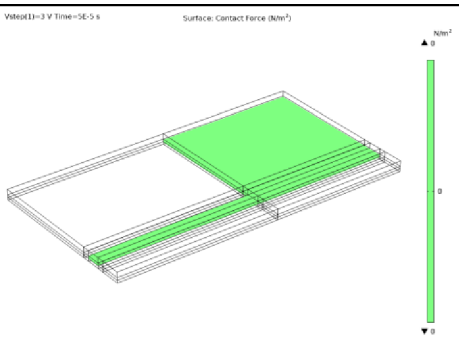 |
| 3.5 V | 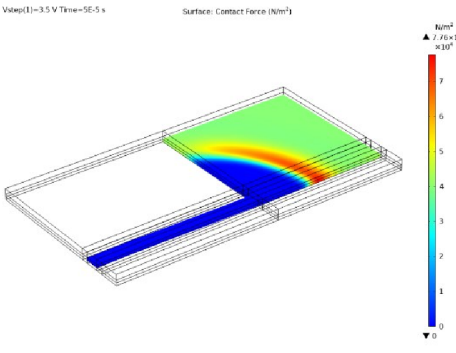 |

| | |
|---|---|
| 4.5 V | 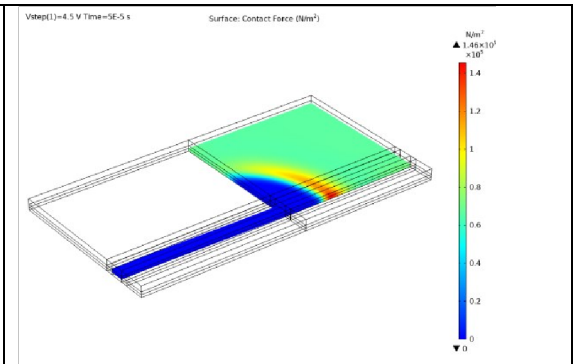 |
| 5 V | 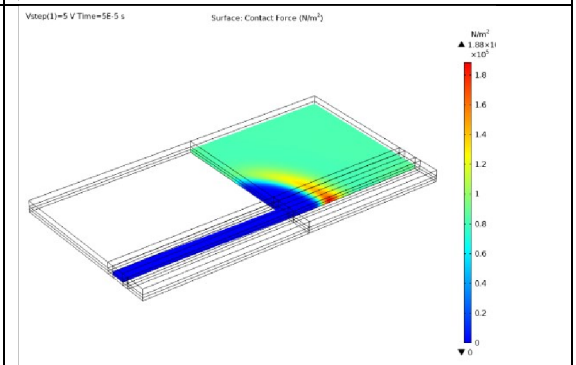 |
| 5.5 V | 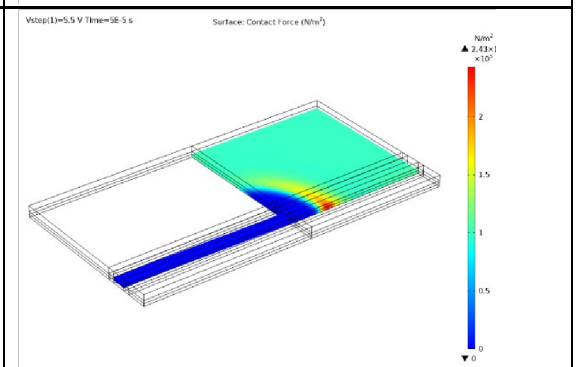 |
| 7.5 V | 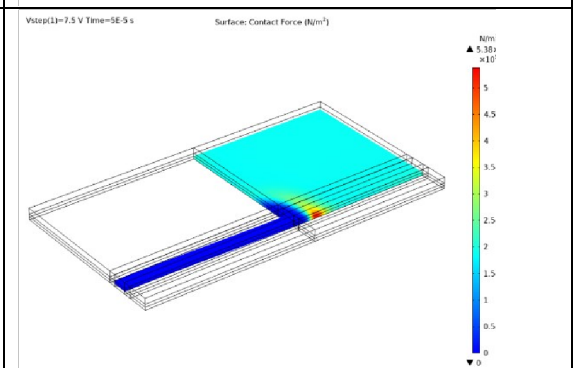 |
| 8.5 V | 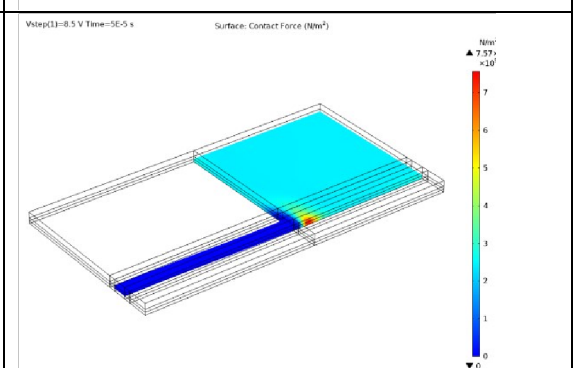 |

| | |
|---|---|
| 9 V | 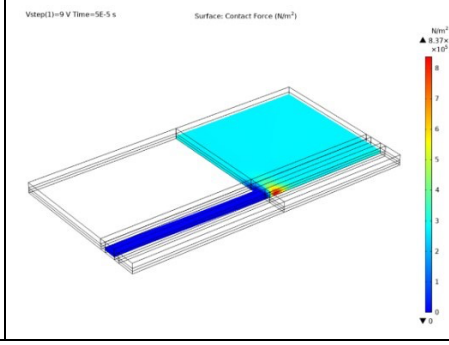 |

Each of the tested maximum voltage shows the values of different contact force happens for the polysilicon cantilever. From the simulation, the contact force started to contact the fixed nitrates at 3.5 V. The simulation table shows that the 3 V still yet does not simulate a contact force. This means the electrostatic force is still weak and cannot attract the cantilever to the fixed nitrates yet by this maximum voltage value [11].

### *3.6 Cantilever Resolve Snaps-In*

The snap-in issue is a type of switch failure that happens when a too large maximum voltage is applied prior to its ON state and cannot support a cantilever's run smoothly. It may break the cantilever with the fastest response time for applying the maximum voltage over 7.5 V. The displacement between the polysilicon cantilever and the fixed nitrates can also be figured out based on the scale color intensity shown in the simulation. The comparison method observes the capacitance graph and displacement graph and the scale colour intensity when the switch runs [19]. The selection of an optimum voltage is determined based on the optimum response time switches from the OFF state to the ON state. Table 10 also shows the result to compare each of the simulations to illustrate which tested maximum voltage can be reliable in this polysilicon cantilever to prevent this snaps-in issue.

**Table 10**
Overall simulation polysilicon cantilever values

| Maximum Voltage Applied (V) | Maximum Capacitance value ON state (pF) | Maximum Displacement (µm) | Contact force ($N/m^2$) | ON state time response (µs) |
|---|---|---|---|---|
| 1.0 | 0.32 | 0.02 | 0 | No ON state |
| 1.5 | 0.64 | 0.04 | 0 | No ON state |
| 2.0 | 0.96 | 0.057 | 0 | No ON state |
| 2.5 | 1.28 | 0.11 | 0 | No ON state |
| 3.0 | 0.22 | 0.35 | 0 | No ON state |
| 3.5 | 6.50 | 0.9 | $7.76 \times 10^{-4}$ | 39 |
| 4.0 | 6.55 | 0.9 | $1.2 \times 10^{-5}$ | 37 |
| 4.5 | 6.63 | 0.9 | $1.46 \times 10^{-5}$ | 36 |
| 5.0 | 6.69 | 0.9 | $1.88 \times 10^{-5}$ | 35 |
| 5.5 | 6.73 | 0.9 | $2.43 \times 10^{-5}$ | 34 |
| 6.0 | 6.75 | 0.9 | $2.6 \times 10^{-5}$ | 34.5 |
| 7.5 | 6.80 | 0.9 | $5.38 \times 10^{-5}$ | 32 |
| 8.5 | 6.80 | 0.9 | $7.76 \times 10^{-5}$ | 32 |
| 9.0 | 6.80 | 0.9 | $7.57 \times 10^{-5}$ | 32 |

Both Figure 17 and Table 10 are the design simulation result for the same polysilicon cantilever. The upper Fig. 17 shows the capacitance versus time, while the lower graph shows the displacement versus time, respectively. The black line is the comparison between the two graphs that shows the time the switch from OFF to ON state. Based on the related literature review [17,20], snaps-in happens when the cantilever reaches its maximum displacement (ON state) and capacitance with largest contact force of highest response time rate [17,19]. Table 10 shows tested maximum voltage from 1 V to 3 V show OFF state but 3.5 V to 9 V are in ON state. The maximum capacitance value at 6.8 pF. The highest rate ON state is on 32 µs. This can be justified that the snaps-in for this polysilicon cantilever happens at maximum voltage from 7.5 V to 9 V. This is due to the cantilever reaches its maximum displacement (ON state) and capacitance with largest contact force of highest response time rate.

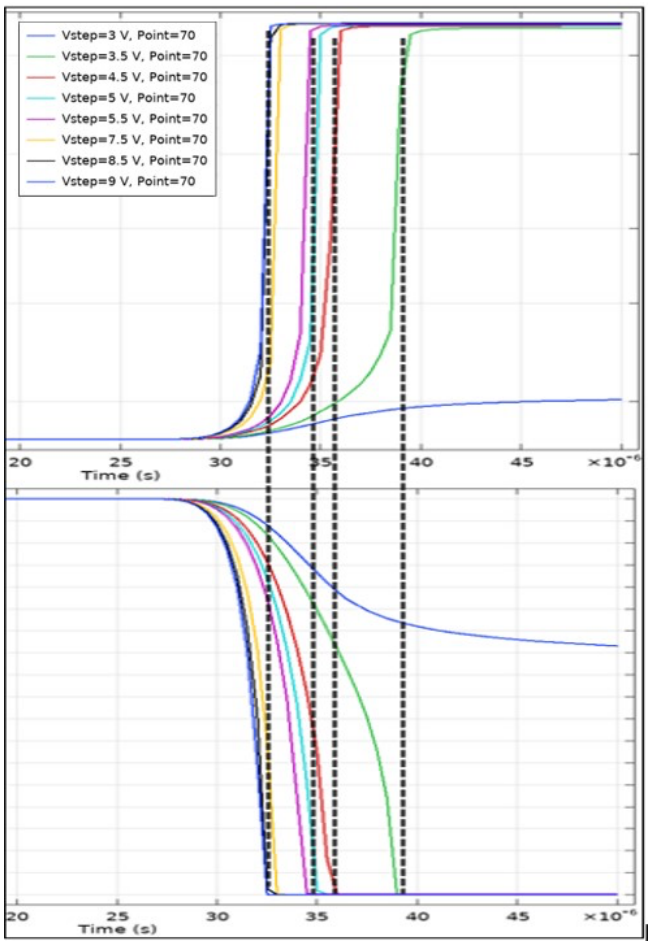


**Fig. 17.** Compared simulation graph of capacitance versus time and displacement versus time

## 4. Conclusions

In conclusion, the polysilicon cantilever is successfully designed by a successful meshing process to study the behaviour of the RF MEMS switch in Comsol Multiphysics software. The simulation was conducted based on the pull-in voltage range obtained from the literature review, which is from 4.5 V until 5.5 V. The actual result obtained from the conducted simulation shows that the pull-in voltage value for application usage is 5 V while the value for tested pull in voltage injected is 3.5 V. The value difference is due to the high vibration and pressure occurs in actual switch application. The polysilicon cantilever is tested to study displacement, and capacitance due to electrostatic force from the injected applied maximum voltages from 1 V to 9 V. The obtain optimum initial voltage is 1 mV due to the reliability value. ON state maximum displacement at tested maximum voltages is at 0.9 µm the by rate 39 us, the capacitance is 6.5 pF and contact force is 7.76 x 10-4 N/m$^2$. The snaps-in issue for this polysilicon cantilever happens at a maximum voltage from 7.5 V to 9 V when the cantilever reaches maximum displacement (ON state) at 0.9 µm displacement and the 6.8 pF of capacitance values with a largest contact force of highest response time rate. The objective is achieved, and the polysilicon RF MEMS switch cantilever is successfully designed in Comsol Multiphysics software.

## References

[1] Lysenko, Igor E., Alexey V. Tkachenko, Elena V. Sherova, and Alexander V. Nikitin. "Analytical approach in the development of RF MEMS switches." *Electronics* 7, no. 12 (2018): 415. https://doi.org/10.3390/electronics7120415

[2] Kaur, Rajneet, C. C. Tripathi, and Dinesh Kumar. "Low voltage RF MEMS capacitive shunt switches." *Wireless personal communications* 78, no. 2 (2014): 1391-1401. https://doi.org/10.1007/s11277-014-1823-y
[3] Guha, Koushik, N. M. Laskar, H. J. Gogoi, A. K. Borah, K. L. Baishnab, and S. Baishya. "Novel analytical model for optimizing the pull-in voltage in a flexured MEMS switch incorporating beam perforation effect." *Solid-State Electronics* 137 (2017): 85-94. https://doi.org/10.1016/j.sse.2017.08.007
[4] Arathy, U. S., and R. Resmi. "Analysis of pull-in voltage of MEMS switches based on material properties and structural parameters." In *2015 international conference on control, instrumentation, communication and computational technologies (ICCICCT)*, pp. 57-61. IEEE, 2015. https://doi.org/10.1109/ICCICCT.2015.7475249
[5] Guha, Koushik, Mithlesh Kumar, Ram Kumar Karsh, Rajeswar Rabha, Anup Dutta, Sandipan Nath, and S. Baishya. "Static and electromagnetic analysis of RF MEMS shunt capacitive switch." In *TENCON 2015-2015 IEEE Region 10 Conference*, pp. 1-6. IEEE, 2015. https://doi.org/10.1109/TENCON.2015.7373170
[6] Ma, Li-Ya, Norhayati Soin, Mohamad Hazwan Mohd Daut, and Sharifah Fatmadiana Wan Muhamad Hatta. "Comprehensive study on RF-MEMS switches used for 5G scenario." *IEEE Access* 7 (2019): 107506-107522. https://doi.org/10.1109/ACCESS.2019.2932800
[7] Saleem, Muhammad M., and Hamid Nawaz. "A systematic review of reliability issues in RF-MEMS switches." *Micro and Nanosystems* 11, no. 1 (2019): 11-33. https://doi.org/10.2174/1876402911666190204113856
[8] Ai, Yun, Michael Cheffena, and Qihao Li. "Radio frequency measurements and capacity analysis for industrial indoor environments." In *2015 9th European Conference on Antennas and Propagation (EuCAP)*, pp. 1-5. IEEE, 2015.
[9] Carty, Eric, Padraig Fitzgerald, and Padraig McDaid. "The Fundamentals of Analog Devices' Revolutionary MEMS Switch Technology." *Technical Article* (2016).
[10] Bojesomo, Alabi, Numan Saeed, and Ibrahim M. Elfadel. "A multiband rf mems switch with low insertion loss and cmos-compatible pull-in voltage." In *2018 Symposium on Design, Test, Integration & Packaging of MEMS and MOEMS (DTIP)*, pp. 1-4. IEEE, 2018. https://doi.org/10.1109/DTIP.2018.8394202
[11] N. Burham, "Membran Silikon Berliang Nano untuk Sistem Penapisan Larutan Biologi," 2016.
[12] Rao, K. Srinivasa, Lakshmi Narayana Thalluri, Koushik Guha, and K. Girija Sravani. "Fabrication and characterization of capacitive RF MEMS perforated switch." *IEEE Access* 6 (2018): 77519-77528. https://doi.org/10.1109/ACCESS.2018.2883353
[13] Lysenko, Igor E., Alexey V. Tkachenko, Olga A. Ezhova, Boris G. Konoplev, Eugeny A. Ryndin, and Elena V. Sherova. "The mechanical effects influencing on the design of RF MEMS switches." *Electronics* 9, no. 2 (2020): 207. https://doi.org/10.3390/electronics9020207
[14] Huddar, Shivashankar A., B. G. Sheeparamatti, and Ajay Sudhir Bale. "Study of pull-in voltage of a perforated SMA based MEMS Switch." In *2017 International conference on Microelectronic Devices, Circuits and Systems (ICMDCS)*, pp. 1-4. IEEE, 2017. https://doi.org/10.1109/ICMDCS.2017.8211584
[15] Jang, Yeonsu, Sungchan Kang, Hyeon Cheol Kim, and Kukjin Chun. "An RF MEMS switch with a differential gap between electrodes for high isolation and low voltage operation." *Journal of Micromechanics and Microengineering* 21, no. 7 (2011): 075016. https://doi.org/10.1088/0960-1317/21/7/075016
[16] Carty, Eric, Padraig Fitzgerald, and Padraig McDaid. "The Fundamentals of Analog Devices' Revolutionary MEMS Switch Technology." *Technical Article* (2016).
[17] Bansal, Deepak, Anuroop Bajpai, Prem Kumar, Maninder Kaur, and Amit Kumar. "Effect of stress on pull-in voltage of RF MEMS SPDT switch." *IEEE Transactions on Electron Devices* 67, no. 5 (2020): 2147-2152. https://doi.org/10.1109/TED.2020.2982667
[18] Jain, Ajay Kumar, Arun Kumar Sharma, Sameer Khandekar, and Bishakh Bhattacharya. "Shape memory alloy-based sensor for two-phase flow detection." *IEEE Sensors Journal* 20, no. 23 (2020): 14209-14217. https://doi.org/10.1109/JSEN.2020.3008191
[19] Saleem, Muhammad M., and Hamid Nawaz. "A systematic review of reliability issues in RF-MEMS switches." *Micro and Nanosystems* 11, no. 1 (2019): 11-33. https://doi.org/10.2174/1876402911666190204113856
[20] P. S. Kumar, "A NOVEL MODEL OF RF MEMS SHUNT SWITCH." [Online]. Available: http://www.ijret.org.